DocuSign Envelope ID: 567628DA-2181-421B-93C3-1240643249FF

BM #2 - BENCH TIE IN BASE OF 8" TULIP POPLAR 9.14' RT. OF -L- STA. 12+81.42, EL. 2,512.60

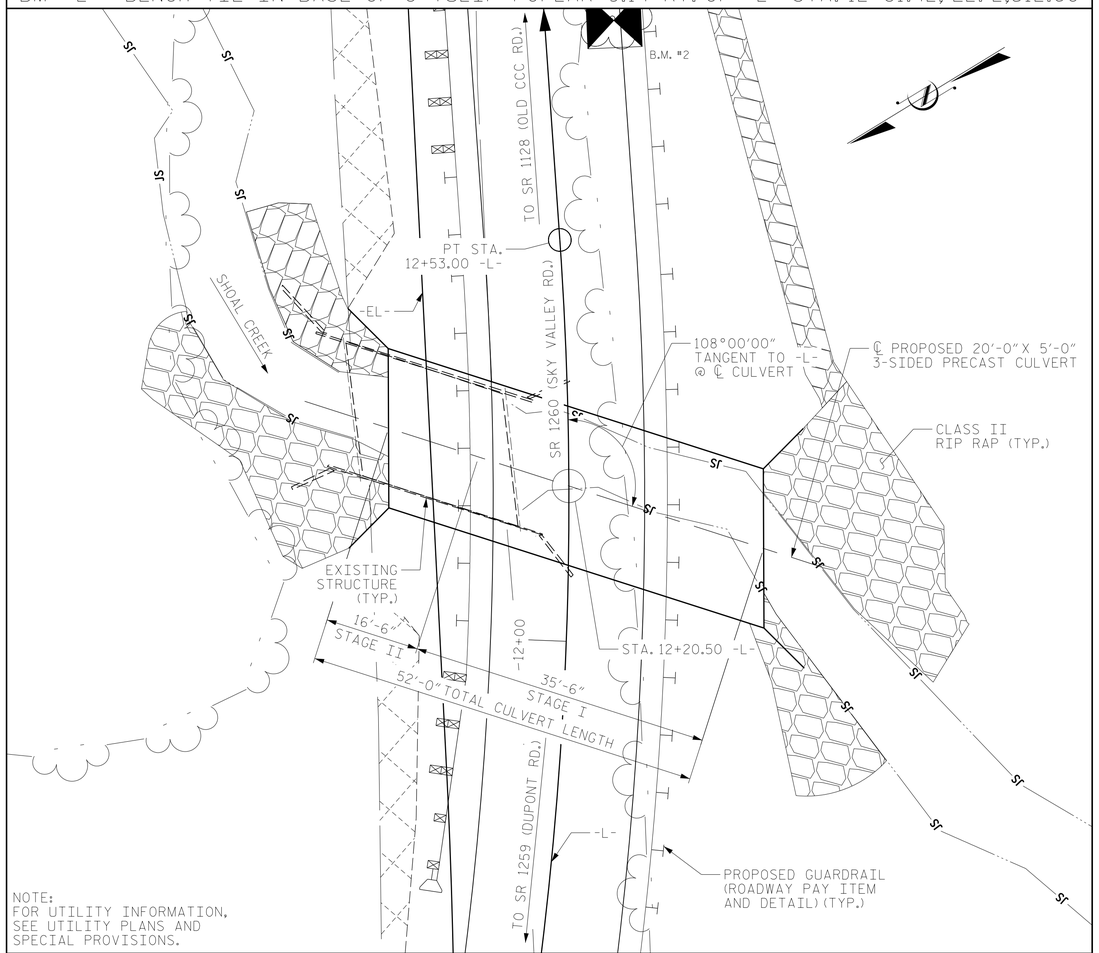

NOTE:
FOR UTILITY INFORMATION,
SEE UTILITY PLANS AND
SPECIAL PROVISIONS.

LOCATION SKETCH

NOTES

ASSUMED LIVE LOAD = HL-93 OR ALTERNATE LOADING

THIS STRUCTURE HAS BEEN DESIGNED IN ACCORDANCE WITH "HEC 18 - EVALUATING SCOUR AT BRIDGES".

THE RESIDENT ENGINEER SHALL CHECK THE LENGTH OF THE CULVERT BEFORE STAKING IT OUT TO MAKE CERTAIN THAT IT WILL PROPERLY TAKE CARE OF THE FILL.

AFTER SERVING AS A TEMPORARY STRUCTURE THE EXISTING STRUCTURE CONSISTING OF 1 SPAN @ 18'-6" TIMBER FLOOR ON TIMBER JOISTS WITH TIMBER CAPS, POSTS, AND SILLS AT VARIOUS CENTERS SHALL BE REMOVED. THE EXISTING BRIDGE IS PRESENTLY NOT POSTED FOR LOAD LIMIT. SHOULD THE STRUCTURAL INTEGRITY OF THE BRIDGE DETERIORATE DURING CONSTRUCTION OF THE PROPOSED STRUCTURE, A LOAD LIMIT MAY BE POSTED AND MAY BE REDUCED AS FOUND NECESSARY DURING THE LIFE OF THE PROJECT.

REMOVAL OF THE EXISTING BRIDGE SHALL BE PERFORMED IN A MANNER THAT PREVENTS DEBRIS FROM FALLING INTO THE WATER. THE CONTRACTOR SHALL SUBMIT DEMOLITION PLANS FOR REVIEW AND REMOVE THE BRIDGE IN ACCORDANCE WITH ARTICLE 402-2 OF THE STANDARD SPECIFICATIONS.

THE STRUCTURE OF THE EXISTING BRIDGE INDICATED ON THE PLANS IS FROM THE BEST INFORMATION AVAILABLE. THIS INFORMATION IS SHOWN FOR THE CONVENIENCE OF THE CONTRACTOR. THE CONTRACTOR SHALL HAVE NO CLAIM WHATSOEVER AGAINST THE DEPARTMENT OF TRANSPORTATION FOR ANY DELAYS OR ADDITIONAL COST INCURRED BASED ON DIFFERENCES BETWEEN THE EXISTING BRIDGE STRUCTURE SHOWN ON THE PLANS AND THE ACTUAL CONDITIONS AT THE PROJECT SITE.

THE DETAILS SHOWN ARE FOR GENERAL LAYOUT ONLY. THE SUPPLIER SHALL PROVIDE DESIGNS AND DETAILS FOR REVIEW AND APPROVAL THAT MEET THE REQUIREMENTS OF THE AASHTO LRFD DESIGN SPECIFICATIONS AND ARE SEALED BY A PROFESSIONAL ENGINEER REGISTERED IN NORTH CAROLINA.

CULVERT IS TO BE DESIGNED FOR A MAXIMUM FILL DEPTH OF 4.46 FT AND A MINIMUM FILL DEPTH OF 2.20 FT.

NATIVE MATERIAL CONSISTS OF MATERIAL THAT IS EXCAVATED FROM THE STREAM BED AT THE PROJECT SITE DURING CULVERT CONSTRUCTION. NATIVE MATERIAL IS SUBJECT TO APPROVAL BY THE ENGINEER AND MAY BE SUBJECT TO PERMIT CONDITIONS.

A THREE FOOT STRIP OF FILTER FABRIC SHALL BE ATTACHED TO THE FILL FACE OF THE WING COVERING THE ENTIRE LENGTH OF THE EXPANSION JOINT.

THE SCOUR CRITICAL ELEVATION IS THE BOTTOM OF THE FOOTING ELEVATIONS. SCOUR CRITICAL ELEVATIONS ARE USED TO MONITOR POSSIBLE SCOUR PROBLEMS DURING THE LIFETIME OF THE STRUCTURE.

THE SPREAD FOOTINGS ARE DESIGNED FOR A FACTORED RESISTANCE OF UP TO 6.5 TSF. CHECK FIELD CONDITIONS FOR THE REQUIRED NOMINAL BEARING RESISTANCE OF 14.5 TSF JUST BEFORE PLACING CONCRETE.

KEY IN SPREAD FOOTINGS AT LEAST 12 IN. INTO WEATHERED ROCK OR CRYSTALLINE ROCK WITH MINIMUM THICKNESS SHOWN ON THE PLANS.

CONCRETE FOR ALL CAST-IN-PLACE COMPONENTS SHALL BE CLASS "A" AS PER THE STANDARD SPECIFICATIONS.

FOR EROSION CONTROL MEASURES, CULVERT DIVERSION DETAILS AND ASSSOCIATED PAY ITEMS, SEE EROSION CONTROL PLANS.

FOR CONSTRUCTION SEQUENCE, SEE EROSION CONTROL PLANS.

FOR MAINTENANCE OF TRAFFIC, SEE TRANSPORTATION MANAGEMENT PLAN.

FOR PRECAST REINFORCED CONCRETE THREE SIDED CULVERT, SEE SPECIAL PROVISIONS.

FOR FALSEWORK AND FORMWORK, SEE SPECIAL PROVISIONS.

FOR SUBMITTAL OF WORKING DRAWINGS, SEE SPECIAL PROVISIONS.

THE CONTRACTOR'S ATTENTION IS CALLED TO THE OVERHEAD UTILITY IN THE AREA OF THE PROPOSED CULVERT. A DEDICATED SPOTTER IS REQUIRED DURING CRANE OPERATIONS. FOR MORE INFORMATION AND FOR CRANE SAFETY, SEE SPECIAL PROVISIONS.

FOR GROUT FOR STRUCTURES, SEE SPECIAL PROVISIONS.

FOR ASBESTOS ASSESSMENT, SEE SPECIAL PROVISIONS.

FOR OTHER DESIGN DATA AND GENERAL NOTES, SEE SHEET SN.

GRADE DATA -L-

GRADE POINT EL. @ STA. 12+20.50 -L-	= 2,514.66
BED EL. @ STA. 12+20.50 -L-	= 2,503.20
ROADWAY SLOPES	= 2:1
TOP OF FOOTING ELEVATION	= 2,504.20

HYDRAULIC DATA

DESIGN DISCHARGE	= 340 CFS
FREQUENCY OF DESIGN DISCHARGE	= 25 YR
DESIGN HIGH WATER ELEVATION	= 2,507.50
DRAINAGE AREA	= 0.79 SQ MI
BASE DISCHARGE (Q100)	= 490 CFS
BASE HIGH WATER ELEVATION	= 2,508.20

OVERTOPPING FLOOD DATA

OVERTOPPING DISCHARGE	= 1,730 CFS
FREQUENCY OF OVERTOPPING	= 500+ YR
△ OVERTOPPING ELEVATION	= 2,515.70
△ STA. 11+69.00 -L-	
ROADWAY OVERTOPPING EL.	= 2,513.50

-L- PROFILE DATA

PI = 12+13.00
EL = 2,513.57
VC = 190'
K = 50
G1 = 0.4896%
G2 = 4.2994%

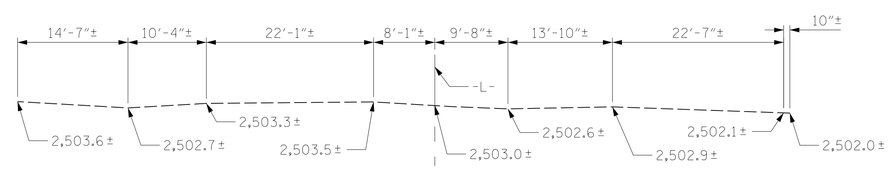

PROFILE ALONG ℄ CULVERT

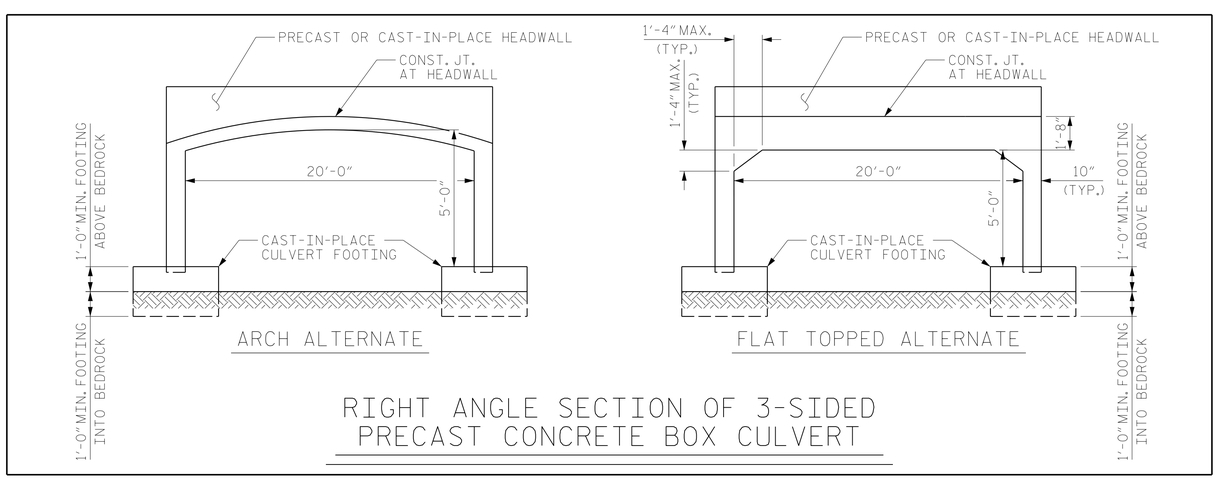

RIGHT ANGLE SECTION OF 3-SIDED
PRECAST CONCRETE BOX CULVERT

TOTAL STRUCTURE QUANTITIES

ASBESTOS ASSESSMENT	LUMP SUM
REMOVAL OF EXISTING STRUCTURE	LUMP SUM
FOUNDATION EXCAVATION	13.5 CY
UNCLASSIFIED STRUCTURE EXCAVATION	LUMP SUM
3-SIDED PRECAST BOX CULVERT @ STA. 12+20.50 -L-	LUMP SUM
CLASS II RIP RAP	150 TONS
GEOTEXTILE FOR DRAINAGE	159 SY

PROJECT NO. 17BP.14.R.179
HENDERSON COUNTY
STATION: 12+20.50 -L-

SHEET 1 OF 6 REPLACES BRIDGE NO. 247

DOCUMENT NOT CONSIDERED FINAL UNLESS ALL SIGNATURES COMPLETED

NORTH CAROLINA PROFESSIONAL SEAL 18442 ENGINEER
DocuSigned by: 12/15/2020

RS&H
RS&H Architects-Engineers-Planners, Inc.
8601 Six Forks Road, Suite 260
Raleigh, NC 27615
919-926-4100 FAX 919-846-9080
www.rsandh.com
North Carolina License Nos. 50073 * F-0493 * C-28

STATE OF NORTH CAROLINA
DEPARTMENT OF TRANSPORTATION
RALEIGH

SINGLE 20'-0" X 5'-0"
3-SIDED PRECAST
BOX CULVERT
FOR SHOAL CREEK ON SR 1260
(SKY VALLEY RD.) BETWEEN
SR 1259 (DUPONT RD.) AND
SR 1128 (OLD CCC RD.)

REVISIONS						SHEET NO.
NO.	BY:	DATE:	NO.	BY:	DATE:	C-1
1			3			TOTAL SHEETS
2			4			6

DRAWN BY :	PDS	DATE :	09/2017
CHECKED BY :	TLC	DATE :	09/2017
DESIGN ENGINEER OF RECORD:	PDS	DATE :	09/2017

12/7/2020
\\ctfile01\transportation\P\1030014001_Div 14 Bridges_2016\1030014004_R.179 440247\Design\Structures\Working DGN\247_001_17BP.14.R.179_SMU_C01.dgn
LynnT